Axis Mobile Bar Leaner

Breakout Tables.

The Minimalist Space Saver.



Product Specification

10 YEARS WARRANTY

140 KG WEIGHT RATING

GECA CERTIFIED

Axis Mobile Bar Leaner

Product Features









Axis Mobile Bar Leaner Highlights

Frame Material

50x50mm square 2mm steel tubing A-Frame, using 50x25mm connecting rails.

Worktop Material

25mm melamine worktops with matching edging.

Table End-Leg Finish

Black Powdercoat finish.

GECA Certified

Axis Mobile Bar Leaner GECA Certified.

Axis Mobile Bar Leaner – Variations



Axis Mobile Bar Leaner 4-Leg
Breakout Table



Axis Mobile Bar Leaner 6-Leg
Breakout Table

Axis Mobile Bar Leaner

Product Dimensions

Axis Mobile Bar Leaner 4-Leg Breakout Table

Width View

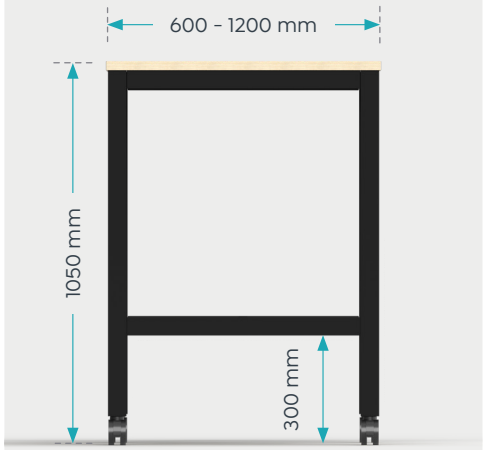

Bottom View



Axis Mobile Bar Leaner 6-Leg Breakout Table

Width View

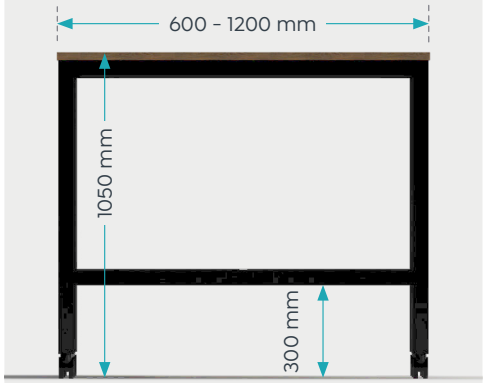

Bottom View



Axis Mobile Bar Leaner

Cheat Sheet – Quick Guide

Features

Frame Material:
50x50mm square 2mm steel tubing A-Frame, using 50x25mm connecting rails.

Worktop Material:
25mm melamine worktops with matching edging.

Table End-Leg Finish:
Black Powdercoat finish.

GECA Certified:
Axis Mobile Bar Leaner GECA Certified.

Worktop Dimensions

Axis Mobile Bar Leaner 4-Leg		Axis Mobile Bar Leaner 6-Leg	
L1200 X W600	L1800 X W750	L1200 X W600	L1800 X W750
L1200 X W750	L1800 X W900	L1200 X W750	L1800 X W900
L1500 X W600	L1800 X W1200	L1500 X W600	L1800 X W1200
L1500 X W750	L2100 X W900	L1500 X W750	L2100 X W900
L1800 X W600	L2400 X W1200	L1800 X W600	L2400 X W1200

Colours On-Hand

Standard Worktop

- W – Studio White
- SO – New Oak Matte
- NO – New Oak Ravine
- M – Nordic Maple

Premium Worktop

- CO – Classic Natural
- ST – Sublime Teak
- WL – Natural Walnut
- OTHER WORKTOP OPTIONS – More Options Available

End-Leg Options

- B P – Black & Polished Alloy
- B B – Black & Black

Complementary Pieces



Vista Rise

Vista Rise is a durable, elevated chair designed for breakout and lunchroom spaces, offering comfort, strength, and modern colour options.



Elaro Stool

Soft curves meet minimalist form in this refined seating series. Compact yet sculptural, Elaro is ideal for reception spaces, breakout zones, and informal meetings.



Game Barstool

Game Chair delivers ergonomic comfort, mobility, and flexible design—ideal for training, classrooms, and large group settings.